PA 4400
19“ Multichannel Amplifier

paseries

Description

The PA 4400 is a sophisticated, class-D multi-channel power amplifier with four channels and two sockets for different input modules. The three different models in this series are equipped with symmetrical line inputs, asymmetrical cinch inputs or an 4-channel Dante module, and can be expanded by adding a second input module. By combining two input modules, the power amplifier can be operated as a central amplifier unit with a mix of analog and digital signal sources. Ground Lift switch for each input channel pair plus dip switches for modifying input sensitivity on each channel enable the amplifier to be easily adjusted to different signal sources.
The PA 4400 circuits are designed to ensure outstanding sound quality and safety levels with minimum heat build-up. The generously proportioned, high-capacity mains adapter together with our new processor-controlled class-D power amplifier modules guarantee outstanding efficiency levels and enormous power reserves. The Automatic On/Off function (switchable for each channel) automatically switches inactive amplifier channels to an energy-saving Sleep mode. The power amplifier has an output rating of 4 × 400 watts at 2-8 ohms or 2 × 800 watts at 4 -16 ohms in bridge mode.
The front features LED for On/Standby, LEDs per each channel for Protect, Limit, Signal, Sleep and LED Bridge per each channel pair as well as gain controllers for each channel. To enable remote control, the amplifiers are equipped with an On/Off contact and VCA inputs with separate channels for external volume control. All outputs can be controlled independently or in groups using our WP-V and RP-V volume controllers or the DV module via Up/Down contacts. Any fault in the power amplifier channels is signaled via the isolated fault contact.

Key Features

- 4-channel digital amplifier
- Three models with different input modules:
  - **PA 4400** with 4 × line IN symmetrical
  - **PA 4400 CINCH** with 4 × line IN cinch asymmetrical
  - **PA 4400 DANTE** with Dante interface
- 4 × 400 watts / 2 × 800 watts output power at 2 to 8 ohms
- Second slot for additional input module
- VCA inputs per channel
- Switchable Automatic On/Off per channel
- On/Off- and Fault contact
- Switchable input Sensitivity +4/-6 dBU per channel
- Silent running regulated fans
- Switchable Ground Lift per input channel pair
- 1 U chassis, installation depth only 348 mm
- Optional:
  - **4×IN-SYM** input module 4 × line In symmetrical
  - **4×IN-CINCH** input module 4 × line In cinch asymmetrical
  - **DANTE 8×8** input module with 8-channel Dante interface
  - 100 V transformer
  - Volume control (wall-panel WP-V or rack-panel RP-V)
  - DV module for volume control via Up/Down contacts

Fields of Application

- Home audio
- Media rooms
- Conference rooms
- Shops, sales rooms
- Gastronomy
- Clubs, discotheques
- Concert halls, theatres
- Churches

PA 4400
19“ Multichannel Amplifier

Technical Data

Inputs	4 × Line IN sym. / 4 × Line IN cinch asym. / Dante (depending on the model)
Nom. input/output level	+4/-6 dBU, switchable
Max. input/output level	+22 dBU
Input impedance	20 kohms
Load impedance	≥ 2 ohms, Bridge ≥ 4 ohms
Outputs	4 × Speaker OUT up to 2 × 4 mm² (screwtype terminals, pluggable)
Output power 2 ohms 4 ohms 8 ohms Bridge	 4 × 400 watts 4 × 400 watts 4 × 400 watts 2 × 800 watts (4 -16 ohms)
Frequency range	15 Hz-22 kHz
Dynamic range	>100 dB
Displays	LED for ON / STANDBY; LEDs per channel for PROTECT, LIMIT, SIGNAL, SLEEP; LED BRIDGE per each channel pair
Controls	Gain control and power switch at front. Dip switches AUTO ON/STEADY ON and SENSITIVITY +4/-6 dBU per channel and dip switches PARALLEL and BRIDGE for each channel pair at back
Additional connectors	VCA inputs 0-10 V for each channel (also for DV modules), floating Fault contact (N/O), Standby contact (N/O or N/C)
Cooling	Silent running regulated fans, air flow from front to back
Protective circuits	Inrush current limiter, peak limiter, current limiter and power limiter for each speaker output, short circuit and multilevel overtemperature protection for all internal channels
Power supply	230 VAC
Mains connector	IEC connector
Power consumption Standby All channels SLEEP All channels active 1/8 th power maximum Max. power consumption Peak power	 < 0.5 watts 12 watts 28 watts 264 watts 440 watts 2440 watts
Dimensions (B × H × T)	19“, 1 U, 483 × 44 × 348 mm
Weight	10 kg
Warranty	5 years

Models

Models	Order-No	Version
PA 4400	3106-0028	4 × line IN symmetrical with pluggable screwtype terminals
PA 4400 CINCH	3106-0029	4 × line IN cinch asymmetrical with pluggable screwtype terminals
PA 4400 DANTE	3106-0030	Dante Interface, 2 × RJ-45 Ethernet (Primary/Secondary)

Input Modules

Input Modules	Order-No	Version
4×IN-SYM	3108-0002	4-channel input module for the PA series/PA DSC series with symmetrical line inputs. The module features GROUND LIFT dip switches for each channel pair, enabling the amplifiers to be operated with grounded signal sources (internal).
4×IN-CINCH	3108-0006	4-channel input module for the PA series/PA DSC series with asymmetrical cinch inputs. The module features GROUND LIFT dip switches for each channel pair, enabling the amplifiers to be operated with grounded signal sources (internal).
Dante 8x8	3108-0009	8-channel Dante input module for the PA series/ PA DSC series. The Dante interface features two RJ45 terminals for audio over Ethernet (primary/secondary). If the primary network connection fails, the module automatically switches to the secondary connection.

Accessories

Accessories	Order-No	Version
WP-V	3401-0002	Wall Panel (Volume regulation and ON/MUTE)
RP-V	3402-0002	Rack Panel (Volume regulation and ON/MUTE)
DV-Module	3109-0006	Digital volume control (UP/DOWN contacts)
PA-T 400	3109-0004	100 V transformer module, 400 watts, toroidal core
PA-T 1 U	3109-0005	Rack cradle 19“, 1U for 4 × PA-T 100, 2 × PA-T 200, 2 × PA-T 400
RP-1 U	3402-0016	19“ Rack mount, 1U, for 6 × RP panels

PA 4400
19“ Multichannel Amplifier

Back View

1 **4×IN-SYM** Input module 4 × line IN symmetrical
2 **4×IN-CINCH** Input module 4 × line IN cinch asymmetrical
3 **DANTE 8×8** Dante interface, 2 × RJ45 Ethernet
5 PARALLEL dip switch per channel pair
6 BRIDGE dip switch per channel pair
7 AUTO ON/STEADY ON dip switch per channel
8 SENSITIVITY+4/-6 dBU dip switch **per channel**
9 **VCA-INPUTS** (Voltage Controlled Amplifier) per channel
10 **DC OUT 15 V** power supply for WP-V/RP-V, 60 mA max.
11 **FAULT CONTACT N/O**
12 **EXT. ON/OFF N/C** (short circuit plug)
13 **OUT** speaker outputs
15 IEC mains connection (power cable enclosed)

PA 4400

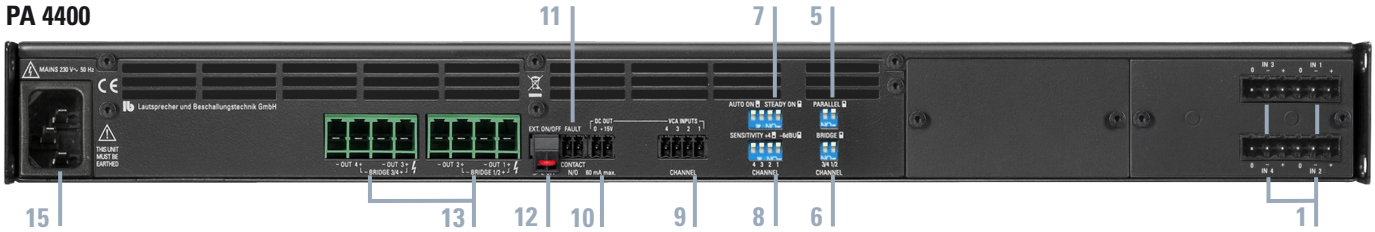

PA 4400 CINCH

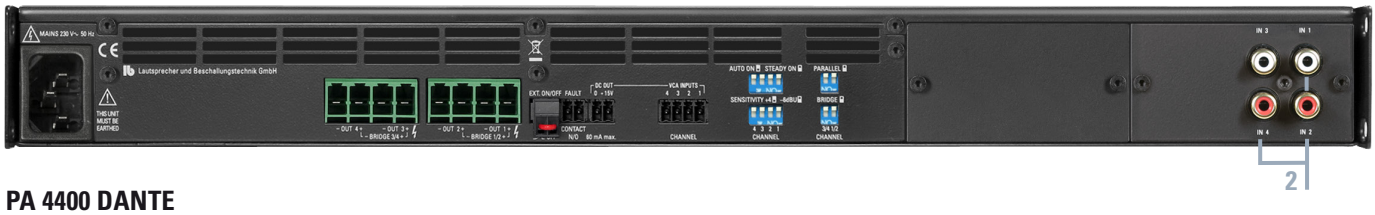

PA 4400 DANTE

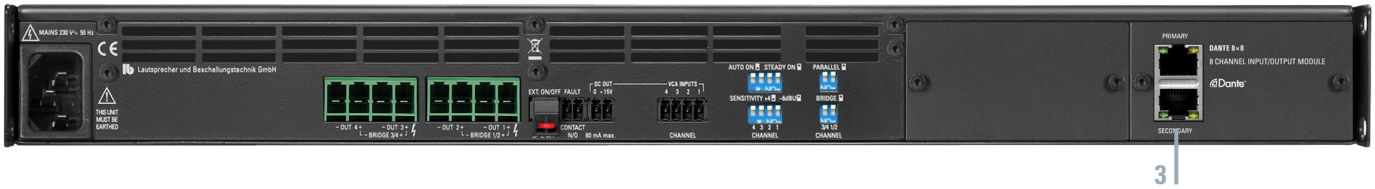

PA 4400
19“ Multichannel Amplifier

Block diagram PA 4400

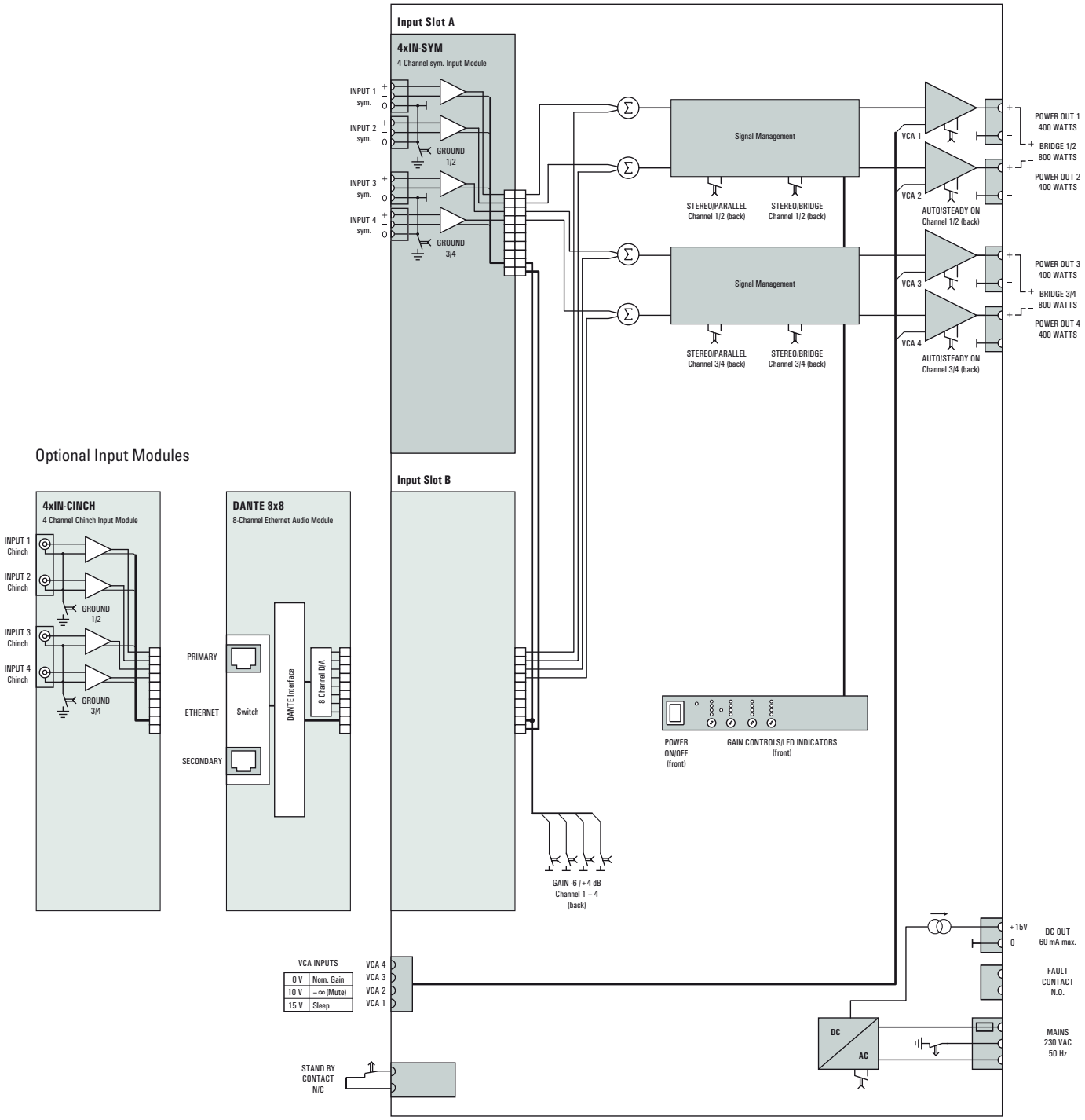

PA 4400
19“ Multichannel Amplifier

Block diagram PA 4400 CINCH

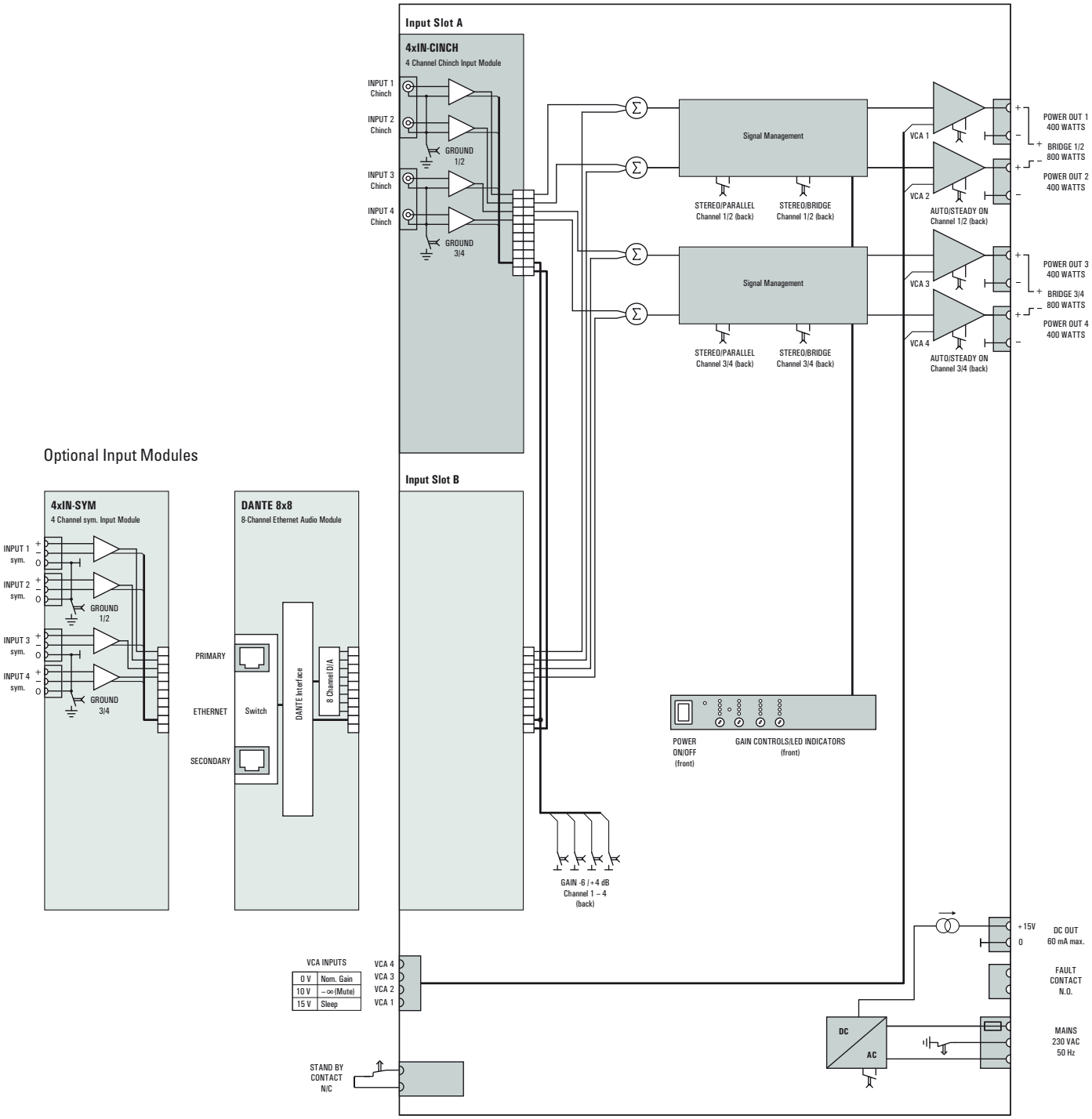

PA 4400
19“ Multichannel Amplifier

Block diagram PA 4400 DANTE

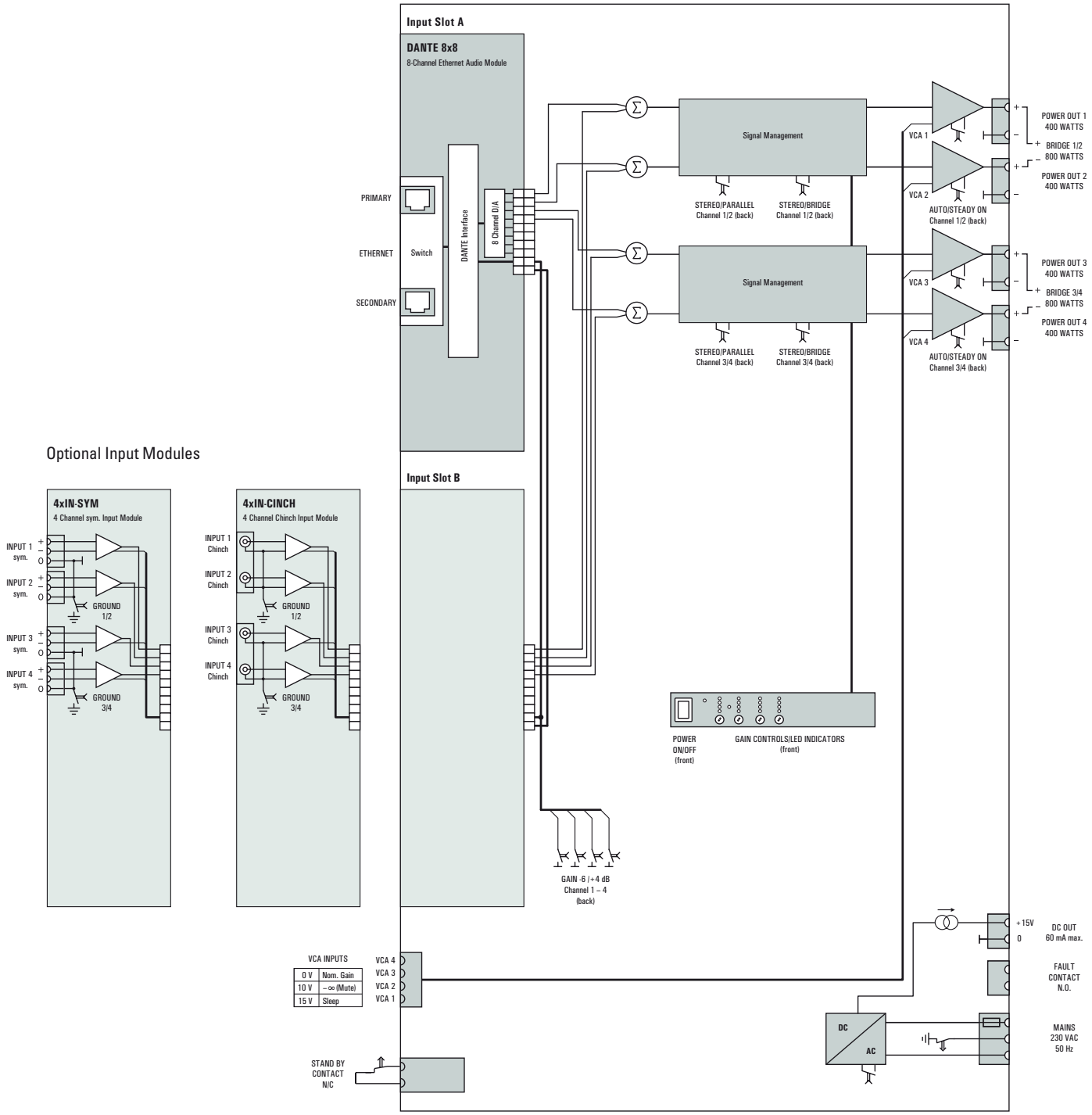

Changes and errors excepted. 2/2023