Operation Manual
DL-A 2.4 DSC AIArray
Display Speakers

display series

pure listening

Content

Safety Instuctions 3

Description DL-A 2.4 DSC AIArray 4

Technical Data DL-A 2.4 DSC AIArray 5

Dimensions DL-A 2.4 DSC AIArray 6

Adjustment of the vertical beam direction 7

Speaker connection and controls DL-A 2.4 DSC AIArray 8

Settings and operation via
LB CONTROL Software 9-12

Mounting with DL-VESA Mounts..... 13

Mounting with WH 80 Mounts 14

Mounting with SH 50 Mounts 15

Security Instructions

ATTENTION!

Service and repair work must only be carried out by qualified personnel. Do not open the case as there is a risk of electric shock. There are no controls or components inside the device that require you to open the case. If the case has to be opened by qualified personnel, make sure that the device is completely disconnected from the power supply.

The operating voltage must match the local power supply.

The device should be shielded from moisture and wet conditions. It must not be operated in rain or close to water, baths, washbasins, sinks, swimming pools or in damp environments. Do not place any objects filled with water such as vases, glasses or bottles on the device.

Avoid direct sunlight and do not install it in the direct vicinity of radiators or other heat sources.
Upon sudden change of climatic conditions (e. g. transfer from a cold place to a warm room) water may condense inside the device, which may lead to malfunction or damage. Before switch-on wait until the amplifiers have reached room temperature.

Unplug the mains plug to protect the device during a thunderstorm or if it is going to be left unsupervised or unused for a longer period of time. This prevents the device being damaged by lightning strikes or voltage surges in the mains grid.

Improper use will invalidate the warranty!

Disclaimer
LB is not liable for damage to speakers or other equipment caused by negligence or in cases where the product has been used for something other than its intended purpose. In particular, LB is not liable for lost earnings or other financial losses incurred by the purchaser. This limitation also applies to the personal liability of employees, representatives and agents.

These products meet the requirements of European Directive 2002/96/EC (WEEE) and 2002/95/EC (RoHS).

DL-A 2.4 DSC AlArray / DL-A 2.4 DSC AlArray DANTE Active Stereo Display Speaker-Pair with Adjustable Vertical Beam Direction

Description

The DL-A 2.4 DSC AlArray is a pair of high-end display speakers with an adjustable vertical dispersion direction for installation on large-format LCD split walls and LED video walls. Depending on the installation height of the speakers, the sound dispersion can be adjusted to the required listening area. Interference caused by sound reflections in indoor spaces is largely avoided. Using our browser-based LB AUDIO CONTROL Software, the vertical dispersion direction can be selected and saved within a range of -30° to +30°. The 16-channel active speakers have a total amplifier power of 2 × 500 watts and are designed for natural reproduction of music and speech at high volume in large indoor spaces. The electronically controlled array with 4 × 1“ high frequency drivers and 4 × 2,5“ mid-range chassis ensures a constant dispersion direction of 140° × 40° (H × V) independent from the beam direction. The integrated subwoofers give DL-A 2.4 DSC AlArrays an extended frequency range with powerful low-frequency sound. For the specific requirements of bass response or high volume we recommend our subwoofers, e. g. SUB 40, SUB 80, B 12 B or B 212 B.
In addition to symmetrical analog inputs, an optical SPDIF input (Toslink) is available.
The DL-A 2.4 DSC AlArray DANTE model is also equipped with a DANTE interface.

Fields of Application

- Conference rooms
- Media rooms
- Stand-alone solutions
- Presentations
- Exhibitions, trade fairs
- Sales rooms

Key Features

- Active stereo speaker pair with adjustable vertical beam direction (+/- 30°)
- Analog and digital inputs. Optionally also DANTE
- Optimized speech intelligibility
- Integrated subwoofer
- 2 × 500 watts power capacity
- Automatic switch-on
- Customized speakers with height on measure for display heights from 1080 up to 2350 mm

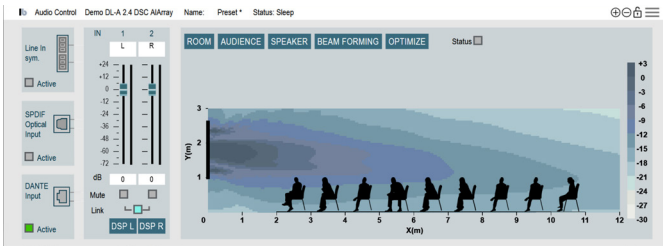

DL-A 2.4 DSC AlArray with an adjustable vertical dispersion direction via our **LB CONTROL App**.

Technical Data DL-A 2.4 DSC AlArray / DL-A 2.4 DSC AlArray DANTE

Technical Data

Principle	Active DSP-Multichannel line array pair with adjustable vertical beam direction setting by using our LB CONTROL Software. Left speaker with amplifier module, right speaker passive
Components	4 × 1“ high-frequency line array + 4 × 2.5“ midrange array + 8 × 2.5“ woofers. Additional 8 × 2.5“ passive radiators at a height over 2000 mm (per side).
Frequency range	48...20.000 Hz
Amplifier Power	2 × 500 watts
Maximum SPL	max. 118 dB (1W/1m)
Nominal dispersion (H × V)	140° × 40° (H × V), vertical adjustable via LB CONTROL Software
Connectors	Symmetrical line input Stereo with system terminals, optical SPDIF input (Toslink), Network socket for DSP control, 16-pin socket for connecting the passive loudspeaker, 24V DC socket for external power supply, Optional 2nd network socket for DANTE
Connection passive speaker	16-pin connection cable with plugs on both sides, length 5 m
Input sensitivity	+4 dB sym., input impedance 10 kOhm
Controls	LED Sleep/On, DIP-switch for Ground Lift and different Automatic-On modes
Automatic switch-on	Switch-Off with approx.10 min. delay
DSP	10 fully parametric filters per input, filter types: Bell, High Shelf, Low Shelf, High pass, Lowpass. Delay up to 500 ms., limiter and compressor per input, 40 presets. Configuration and control via LB CONTROL app. Download from our website: https://www.lb-lautsprecher.de/en/download-software
Power supply	Extern power supply 24 VDC, 20 VA
Mains connection	90 – 240 VAC
Dimensions (W × H × D)	80 × 1080 × 103 mm (per speaker)
Weight	14 kg (pair)
Cabinet	Aluminium, front precision steel grille, powder coated
Fastening points	Threaded inserts 8-12 × M 8 at back (per speaker)
Warranty	5 years

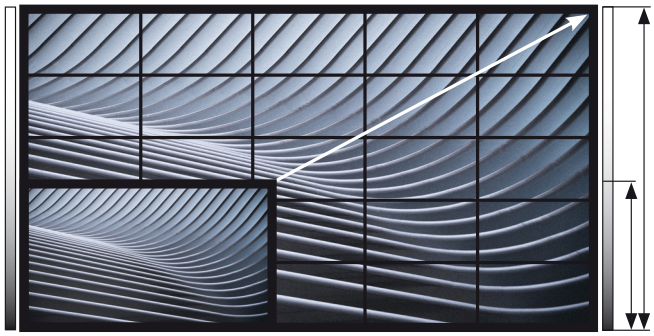

Customized versions: Individual display speakers from 1080 mm up to 2350 mm height

Model	Order-No.	Version
DL-A 2.4 DSC AlArray	1133-000	Standard, height 1080 mm, RAL 9005, pair
DL-A 2.4 DSC AlArray DANTE	1133-006	Standard, height 1080 mm, RAL 9005, pair
Customized versions		
DL-A 2.4 DSC-1600	1133-0002	Height on measure, 1080 – 1600 mm, black
DL-A 2.4 DSC-1600 DANTE	1133-0007	Height on measure, 1080 – 1600 mm, black
DL-A 2.4 DSC-2000	1133-0003	Height on measure, 1600 – 2000 mm, black
DL-A 2.4 DSC-2000 DANTE	1133-0008	Height on measure, 1600 – 2000 mm, black
DL-A 2.4 DSC-2350	1133-0004	Height on measure, 2000 – 2350 mm, black
DL-A 2.4 DSC-2350 DANTE	1133-0009	Height on measure, 2000 – 2350 mm, black
Fee DL	1113-0005	Customized version fee DL (one-time charge per display type and order)

Accessories	Order-No.	Version
VESA mounts for display speakers		
DL-VESA 2300	7111-0024	1850 – 2300 mm display width
DL-VESA 2600	7111-0025	2150 – 2600 mm display width
Wall-mounts for Display Speakers		
SH 50 Wall-mounts	7110-0004	Pivotable (2 pieces per speaker pair)
WH 80 Wall-mounts	7111-0013	Adjustable to a distance of 35 to 110 mm from the wall, pair (two pairs required per speaker)

Individual display speakers from 1080 mm to 2350 mm height

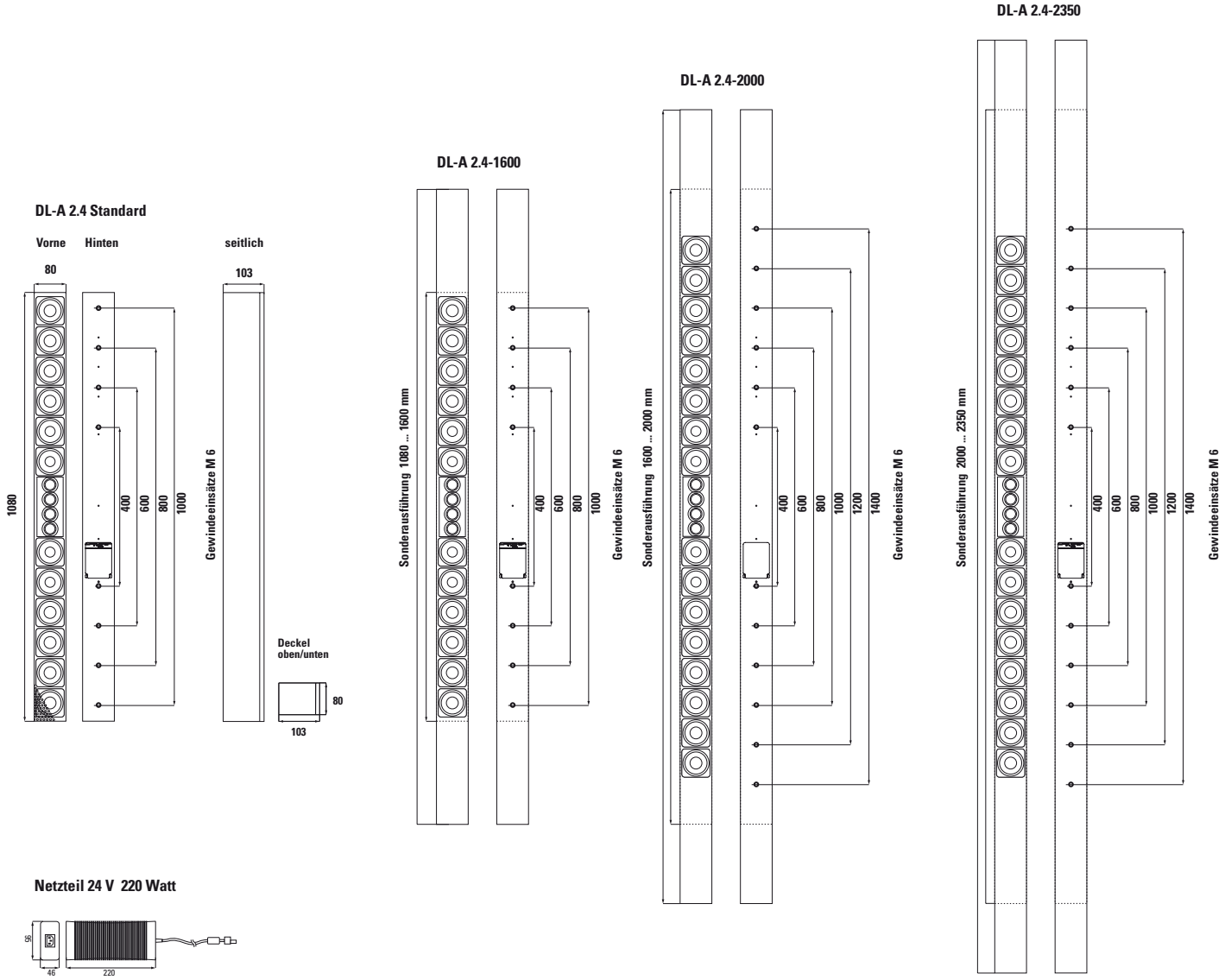

Netzteil 24 V 220 Watt

Speaker connection and controls DL-A 2.4 DSC AIArray

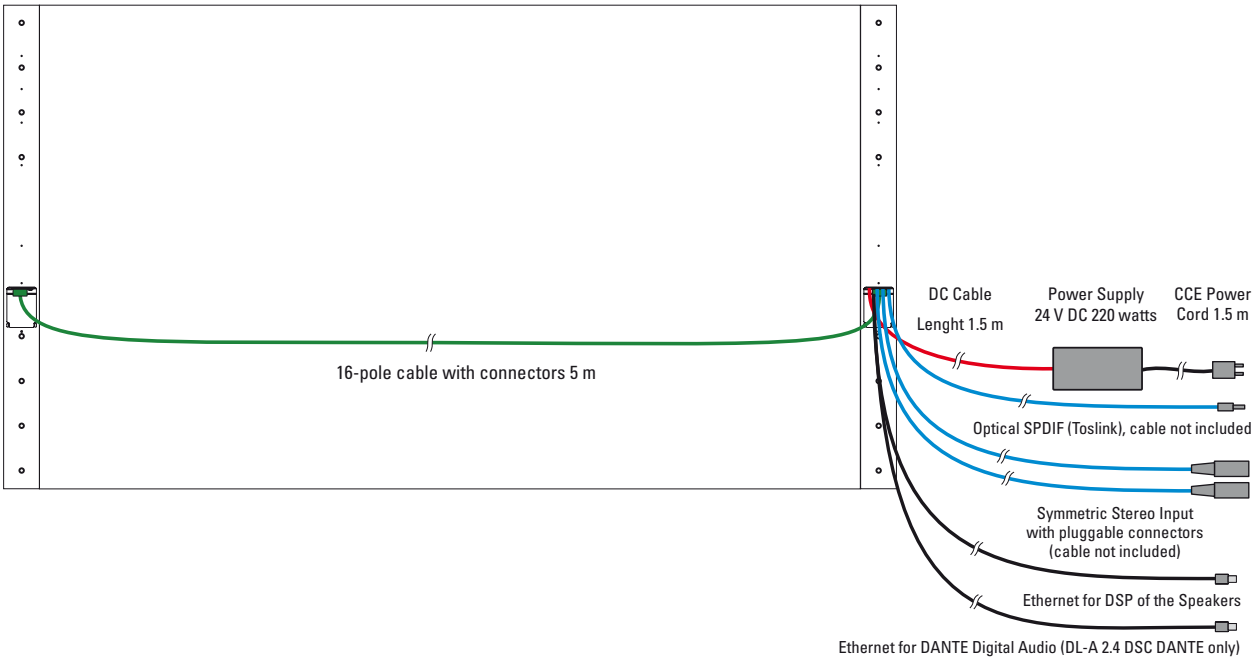

Connection terminals

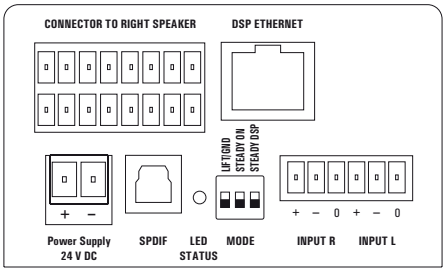

DL-A 2.4 DSC AIArray Connection terminal
Active speaker (L)

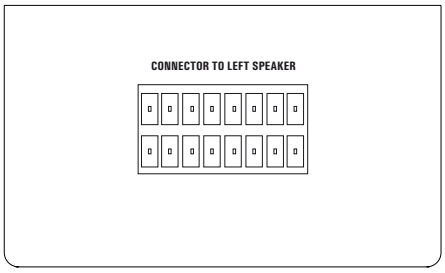

DL-A 2.4 DSC AIArray Connection terminal
Passive speaker (R)

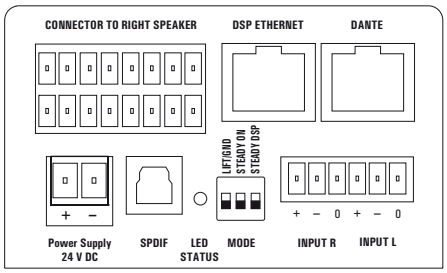

DL-A 2.4 DSC AIArray Connection terminal
Active speaker DANTE

Connection and operation

Power supply:
The included 24V power supply is first plugged into the green socket of the connection terminal and then connected to the power supply using the power cable.

Connecting the audio inputs:
The connection terminal has both symmetrical line inputs with 4dBU sensitivity and RCA inputs with -6dBU sensitivity.

Connecting the passive speaker:
The passive speaker is plugged into the connection terminal of the active speaker (left) with the included 12-pin speaker cable.

Network connection:
To program and control the speakers, a network cable is connected to the connection terminal (Ethernet).

Ground lift switch:
If the players (display, matrix switcher, etc.) are grounded, the speakers should not be grounded and vice versa.
(To avoid humming noises)

Automatic switch-on (STEADY ON, STEADY DSP):
The speakers switch on automatically when an audio signal is present at the input. If there is no signal for more than 10 minutes, they switch to standby. If the speakers are to be permanently switched on (e.g. because they are switched on and off via the power supply, then the DIP switch should be set to STEADY ON. Since the DSP is started up via signal when switched on, the automatic switch-on process takes approx. 5 seconds. This time can be shortened to approx. 0.5 seconds if the DSP is switched on permanently with the STEADY DSP switch. Then only the power amplifiers switch on and off automatically. This increases the power requirement by approx. 7 watts. The ON LED on the connection terminal lights up green when the speakers are switched on and red in standby.

LB CONTROL App

The LB CONTROL software is available for download on our homepage. There are versions for Windows and Mac OS available. Follow the installation steps during the installation process. The icon for running the app is installed on the desktop.

LB Control

When you open the app, the following window opens in the browser:

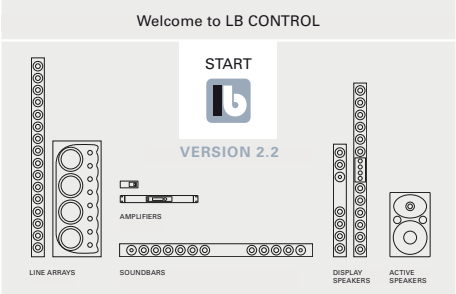

If the new START field for version 2.2 does not appear when installing over an older version of LB CONTROL, please refresh the browser cache using the following key combination:

Firefox: [CTRL] + [F5]
Chrome / Edge: [SHIFT] + [F5]

Firefox / Chrome / Edge (Mac): ⌘+ SHIFT + r
Safari (Mac): ⌘ ⌥ R

Then click on START and perform a refresh in the overview window using the same key combination. The new version will then be available the next time you open it.

OVERVIEW-Window

When you start the LB CONTROL app, the Overview window opens. All LB devices detected in the network are displayed here. Virtual demo devices can also be inserted via the menu.

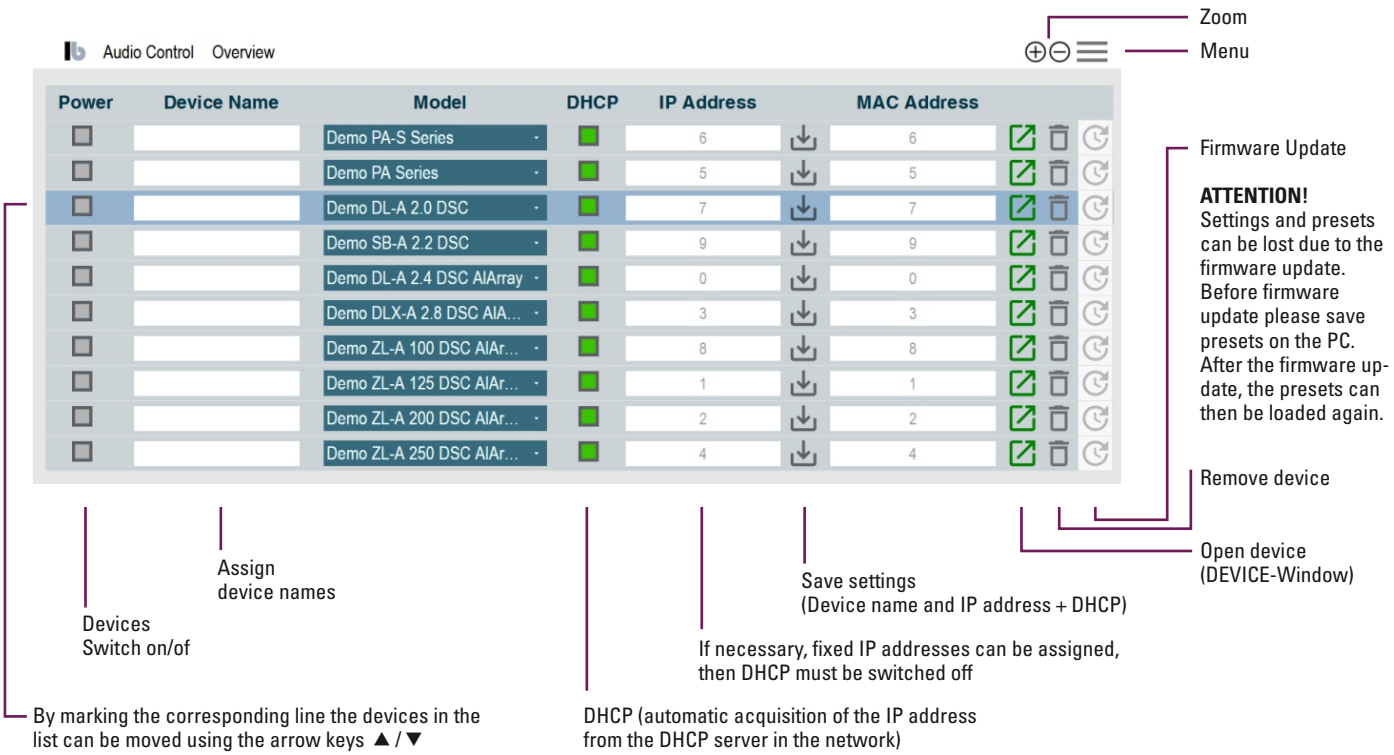

Open DEVICE-Window

Click to open the Device window of one of the devices.

DEVICE-Window: Beam Steering with LB CONTROL Software

With our browser-based LB CONTROL software, the DL-A 2.4 AlArray display speakers can be installed in no time be configured according to the room size and the positions of the audience areas. With the OPTIMIZE function the beam direction is automatically directed towards the audience areas. Alternatively, the beam can also be used via inclination and opening angle can be created or adjusted individually.

Basic settings

When you open a device or a demo device, a room situation is preset at the factory. For a new project, adjust the relevant parameters and calculate the sound radiation.

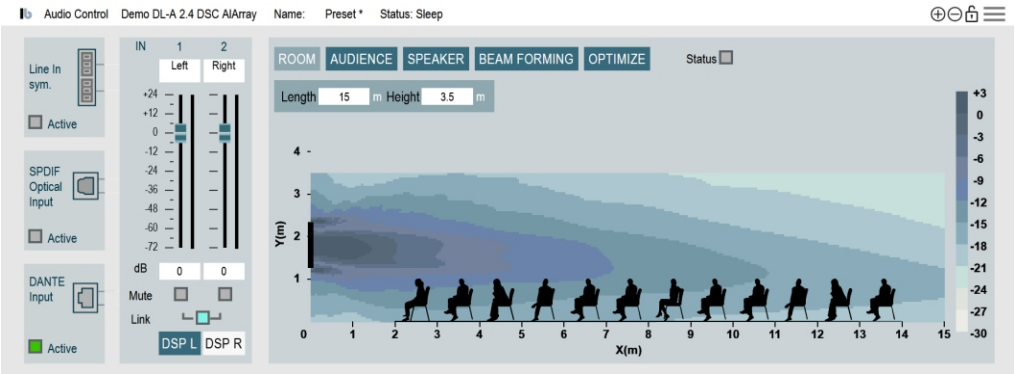

Individual settings

For a new project, enter the parameters individually. The settings are adopted directly in the connected display loudspeaker (device).

1. ROOM: Input space-parameter
2. AUDIENCE: Position and inclinaton of the audience level
3. SPEAKER: Speaker position
4. OPTIMIZE: Automatic Optimization: Alignment to the audience area
5. BEAM FORMING: Manual enter or correction of radiation direction and opening angle

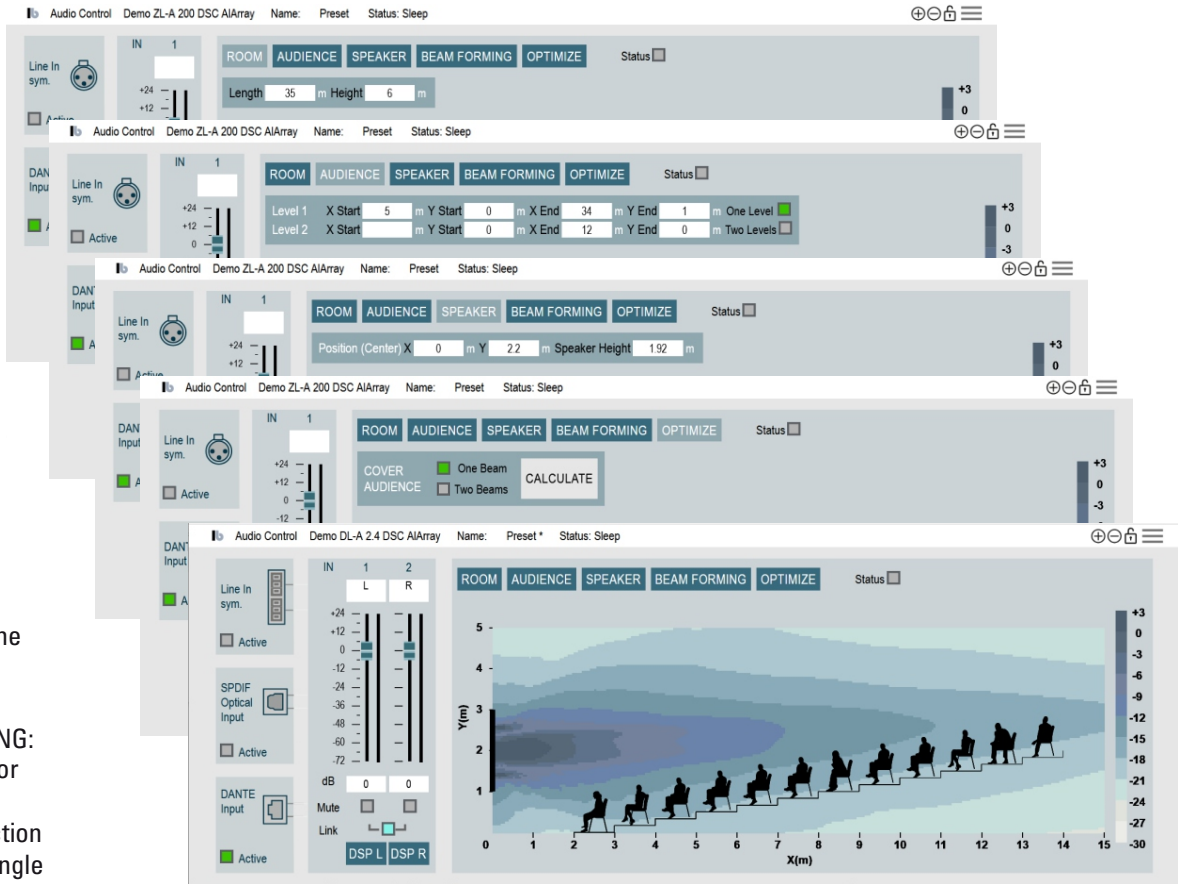

DEVICE-Window: Menu settings

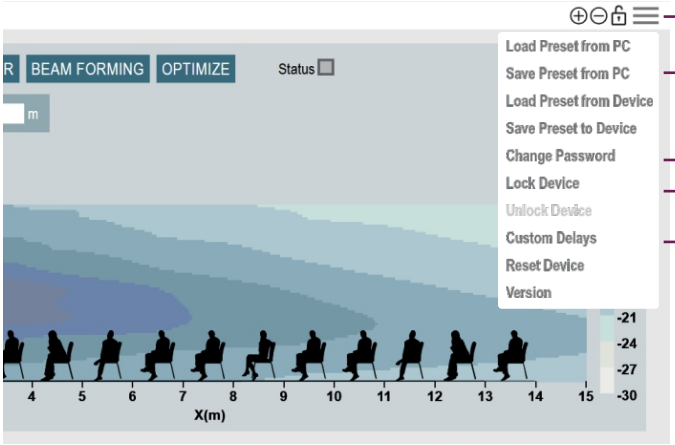

Menu

Presets can be loaded from the device or from the PC. Presets can also be saved on the device or the PC.

Changing passwords: Factory-set passwords are assigned for USER and ADMIN. These should be replaced with project-specific passwords and documented. Presets can also be saved on the device or PC.

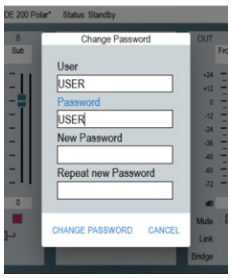

Lock functions

Resets the device to factory settings

Lock functions

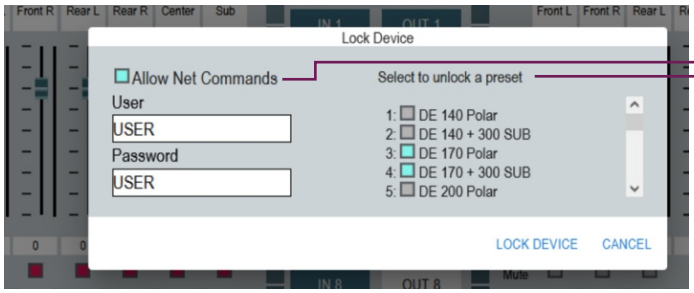

Network commands can be allowed even for locked devices if necessary. This allows control via media controllers even on locked devices.

Individual presets can be allowed even for locked devices if necessary. This allows the user to switch between different operating states.

Lock levels

Two user levels are available for all devices: USER and ADMIN. The ADMIN user level has priority over the USER level, meaning a device locked at the USER level can be unlocked by the ADMIN user, but not vice versa. The factory passwords „USER“ and „ADMIN“ should be replaced with project-specific passwords and documented.

DSP settings in the Input window

Click DSP in the Device window to open the Input window with the DSP functions.

Input Gain + Level Meter

Parametric filters: 10 filters are available for each channel

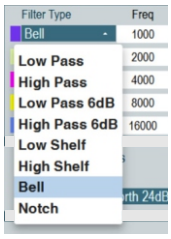

Delay
Depends on device type

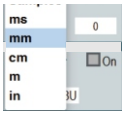

High-pass and low-pass filters per channel

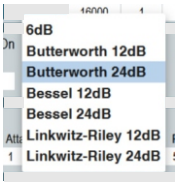

Limiter
per channel

Compressor
per channel

CHANNEL-Window

The settings for the individual channels are made in the CHANNEL windows.

Input-Window

Input Gain + Level Meter

Delay up to 500 ms per channel

Limiter per channel

Compressor per channel

LB CONTROL APP

Browser-based Software
Interface: Ethernet
Windows + Mac OS

Download:
www.lb-lautsprecher.de

LB AUDIO CONTROL NETWORK COMMANDS (DL-A 2.4 DSC)

SETTINGS

FUNCTION	URL	EXAMPLE URLs
MUTE	<DSC IP>/cmds/mute/<CH>/<i/o>	Mute input 1: http://192.168.0.100/cmds/mute/1/i
UNMUTE	<DSC IP>/cmds/unmute/<CH>/<i/o>	Unmute input 2: http://192.168.0.100/cmds/unmute/2/i
GAIN	<DSC IP>/cmds/gain/<CH>/<i/o>/<value>	Gain input 1 auf -4,8 dB: http://192.168.0.100/cmds/gain/1/i/-4.8
PRESET	<DSC IP>/cmds/preset/<num>	Select preset 10: http://192.168.0.100/cmds/preset/10
POWER	<DSC IP>/cmds/power/<on/off>	Switch device on/off http://192.168.0.100/cmds/power/on http://192.168.0.100/cmds/power/off
Read out	JSON format	
STATUS	<DSC IP>/status	Overall status (power, preset, gain, mute, mixer) http://192.168.0.100/status

{ „power“: „sleep“, „preset“: 1, „channels“: [
{ „channel“: 1, „type“: „i“, „gain“: -12.0, „muted“: true},
{ „channel“: 2, „type“: „i“, „gain“: -12.0, „muted“: true},

STATUS CH	<DSC IP>/status/<CH>/<i/o>	Channel status (gain, mute) http://192.168.0.100/status/1/i

{ „channel“: 1, „type“: „i“, „gain“: -3.0, „muted“: false}

LEVELS	<DSC IP>/levels	Read out all levels and gain reductions (limit) http://192.168.0.100/levels

{ „channels“: [
{ „channel“: 1, „type“: „i“, „level“: 4.0, „limit“: -3.2 },
{ „channel“: 2, „type“: „i“, „level“: 4.0, „limit“: -1.6 },

LEVELS CH	<DSC IP>/levels/<CH>/<i/o>	Channel read out level and gain reduction (limit) http://192.168.0.100/levels/2/i

{ „channel“: 2, „type“: „i“, „level“: 4.0, „limit“: -1.6 }

Mounting with DL-VESA Mounts

Variant G
With a flat display and the deep Display speakers DL-A 2.4 the T-brackets are mounted to the front to compensate the distance.

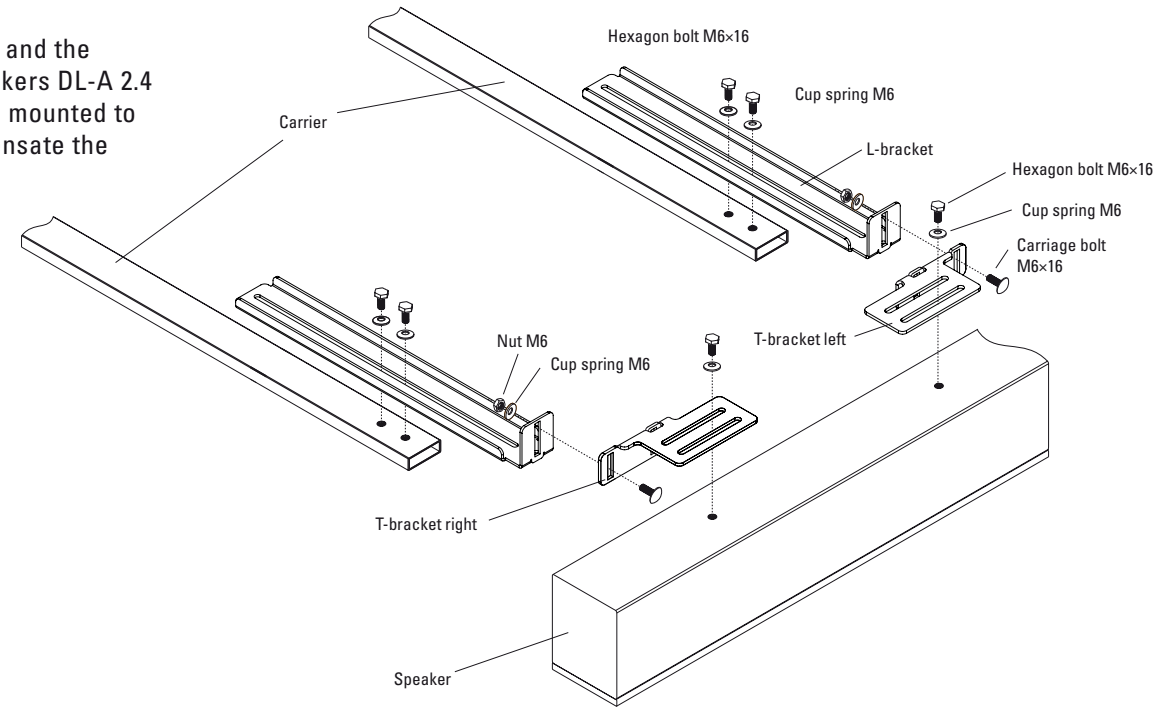

Variant H
If an even greater distance needs to be compensated, the extensions are additionally installed between the T-bracket and L-bracket.

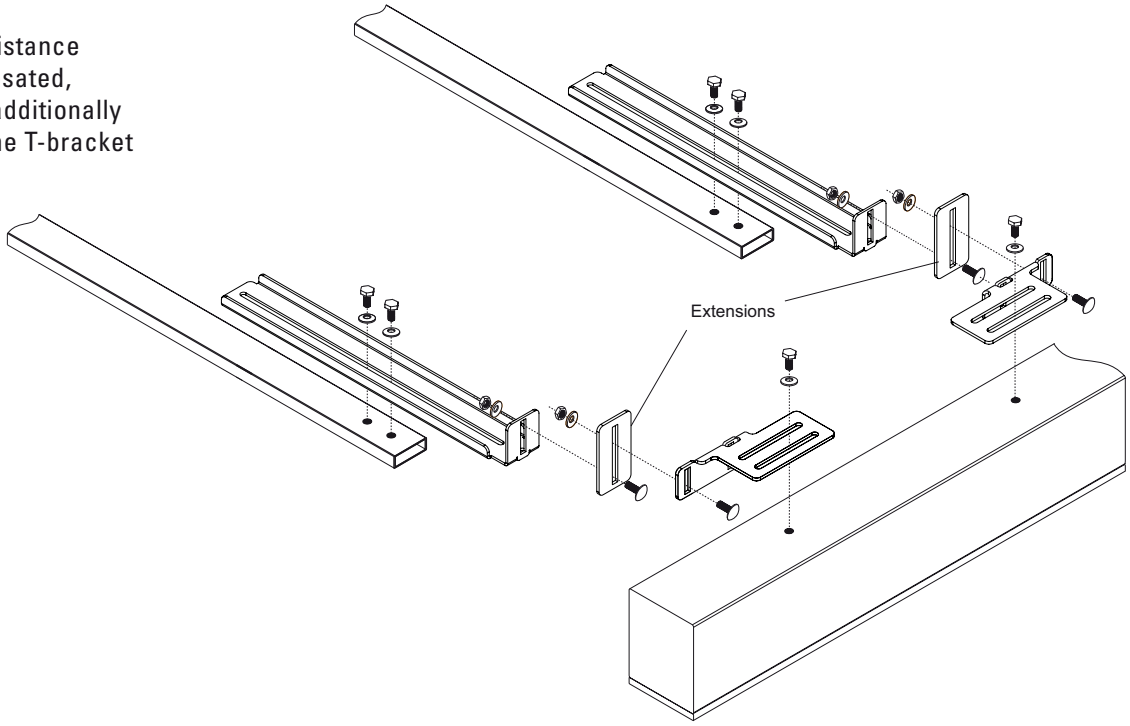

Mounting with WH 80 Mounts

The WH 80 wall mount is adjustable for a wall distance of 35 to 110 mm. (2 pairs are required per pair of speakers)

Dimensions

L-Bracket A

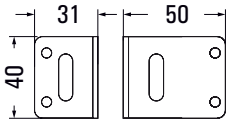

L-Bracket B

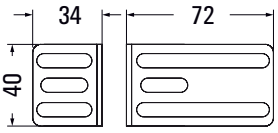

Wall distance 35 – 110 mm

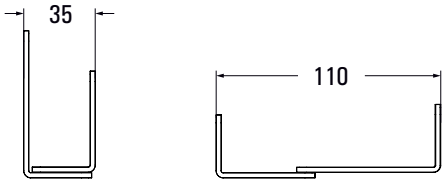

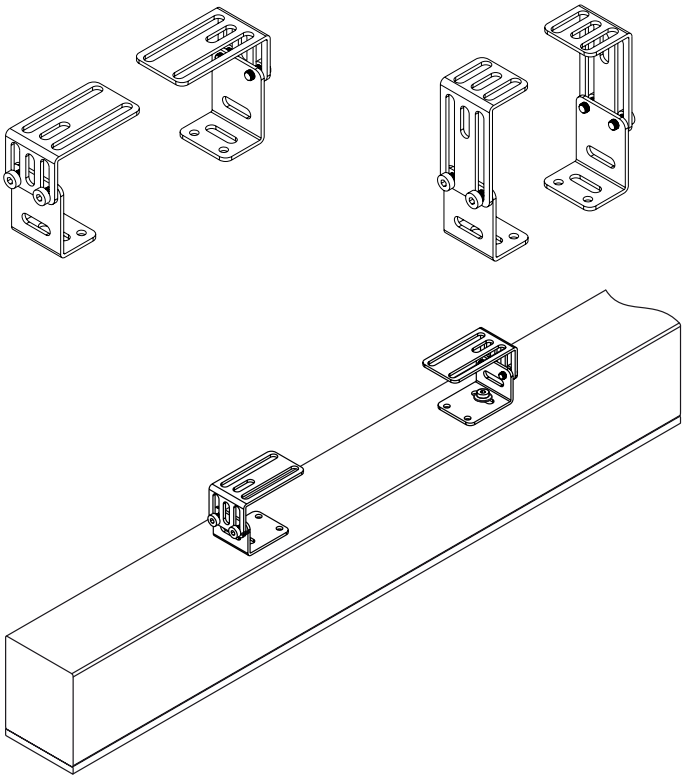

The L-brackets A are attached to the back of the speaker using the screws provided. (Hexagon socket screws M 6 × 16 + disc springs)

The L-brackets B are attached to the wall and then screwed to the L-brackets A. (Allen screws M 6 × 10 + disc springs)

DL-A 2.4 DSC with WH 80

Mounting with SH 50 Mounts

The SH 50 pivotable bracket has a distance from the wall of 33 mm and can be swiveled up to 45°. (Per speaker pair 2 pieces required)

Dimensions

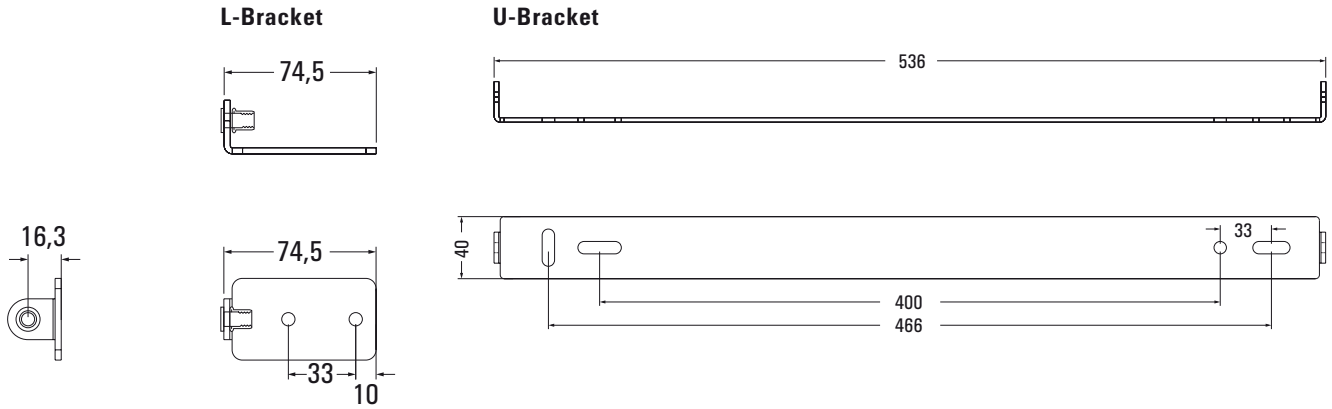

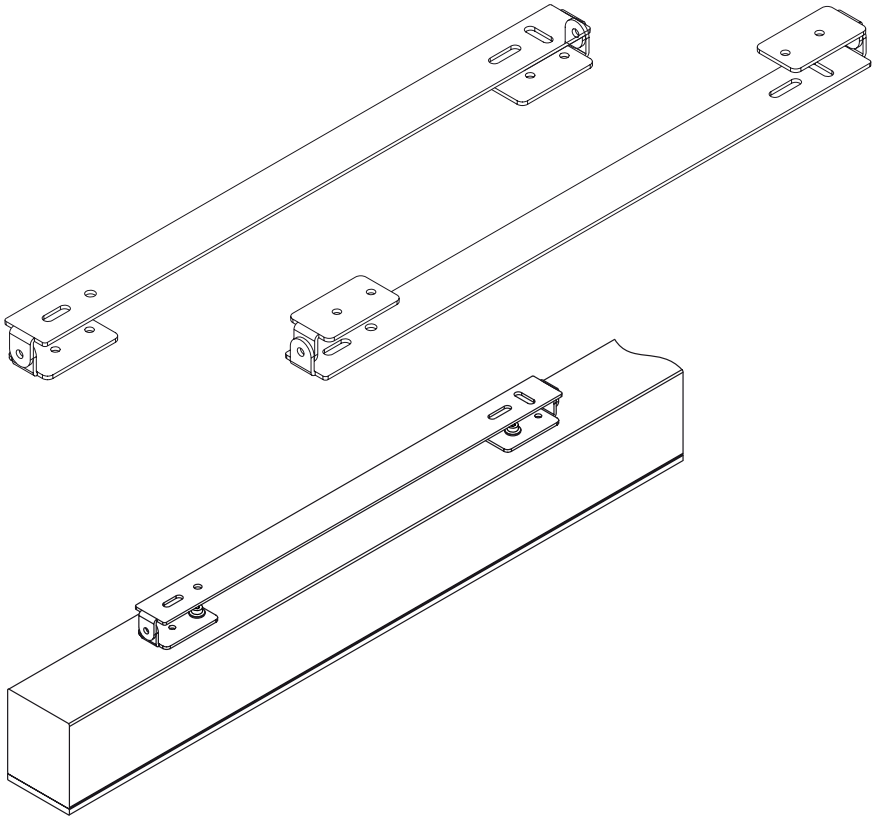

The L-brackets are attached to the back of the speaker using the included screws. (Hexagon socket screws M 6 × 16 + disc springs)

The U-bracket is attached to the wall and then screwed to the L-brackets. (Hexagon socket screws M 6 × 16 + disc springs)

The speakers can be pivoted up to 45°.

www.lb-lautsprecher.de
Display Speakers and Soundbars

LB Lautsprecher
und Beschallungstechnik GmbH

info@lb-lautsprecher.de
www.lb-lautsprecher.de
www.feiner-hoeren.de
@LB_Audio_Components

Tel +49 89 1893109-0 · Fax -29

Kapellenstr. 10
85622 Feldkirchen
(near Munich)

Photo.: GE Additive, Garching / Media rooms

6/2024
Changes and errors excepted.
© LB Lautsprecher und Beschallungstechnik GmbH